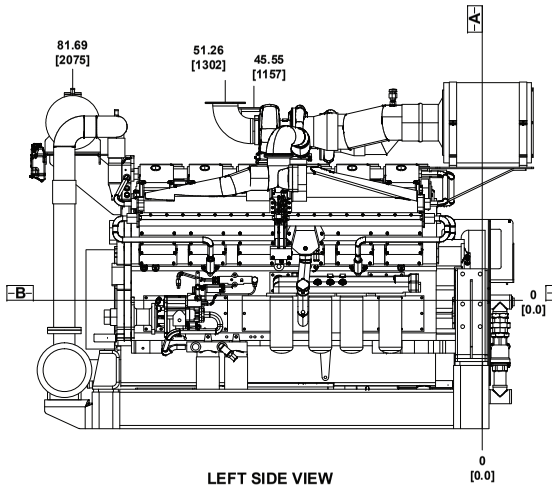

LEFT SIDE VIEW

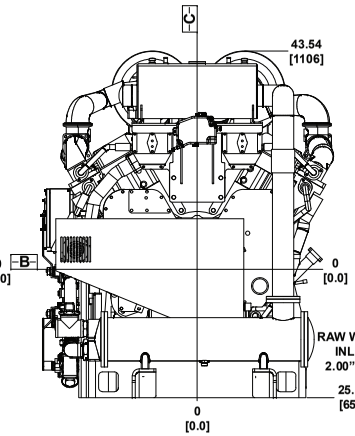

FRONT VIEW

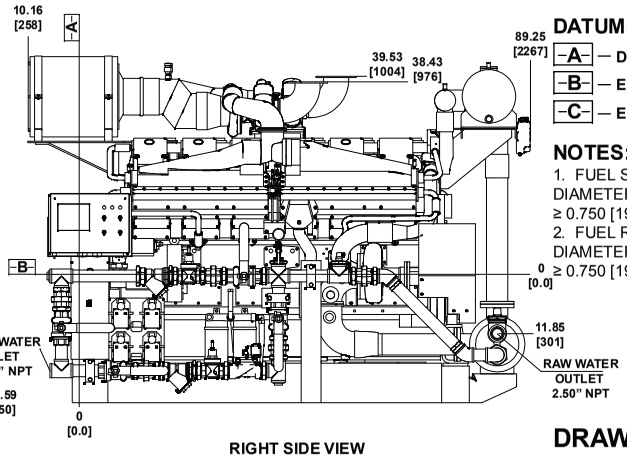

RIGHT SIDE VIEW

DATUMS:

- -A- — DIMENSIONAL FACE OF FLYWHEEL
- -B- — ENGINE HORIZONTAL CENTER (CRANKSHAFT)
- -C- — ENGINE VERTICAL CENTER (CRANKSHAFT)

NOTES:

1. FUEL SUPPLY PIPING MINIMUM INSIDE DIAMETER FROM TANK TO ENGINE MUST BE ≥ 0.750 [19].
2. FUEL RETURN PIPING MINIMUM INSIDE DIAMETER FROM TANK TO ENGINE MUST BE ≥ 0.750 [19].

DRAWING SUBJECT TO CHANGE WITHOUT NOTICE.

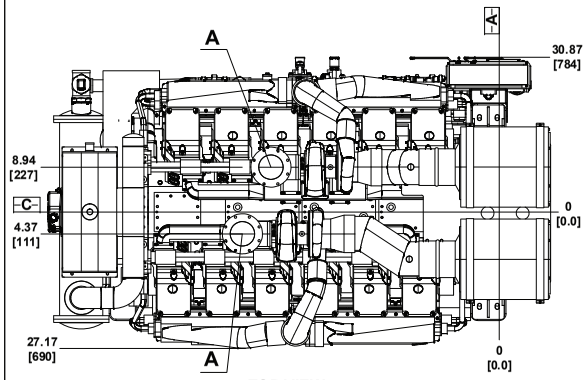

TOP VIEW

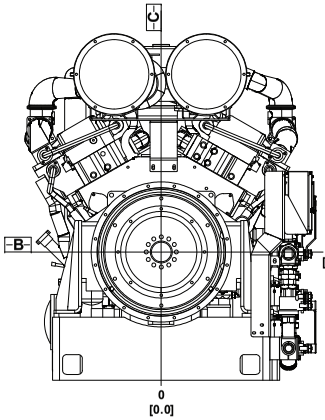

REAR VIEW

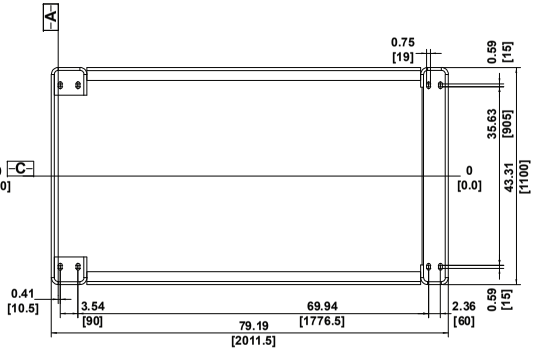

MOUNTING DIMENSIONS

FLYWHEEL HOUSING SAE #0

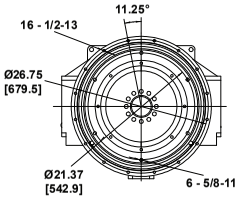

FLYWHEEL 18.00

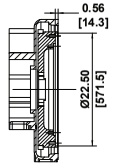

EXHAUST FLANGE X2

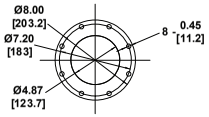

SCALE 2:1

B - B

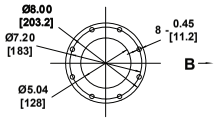

BELLOWS 2X

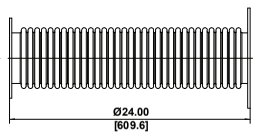

SCALE 2:1

A - A

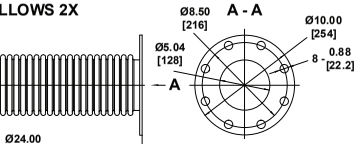

CLASS 150 PSI

B - B

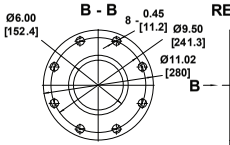

CLASS 150 PSI

REDUCER 2X

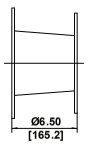

A - A

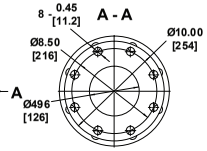

CLASS 150 PSI

NOTES:

1. ALL PLUMBING MUST BE SUPPORTED AND/OR ISOLATED SO THAT NO WEIGHT OR STRESS IS APPLIED TO ANY ENGINE COMPONENT.
2. REFER TO SPECIFIC MODELS' INSTALLATION, OPERATION & MAINTENANCE MANUAL FOR INSTALLATION GUIDELINES.

REV	DESCRIPTION	DWN	APVD	DATE
A	CREATION	MJF		09/01/2020

AMERIFLO

DRW BY: MJF	DATE: 09/01/2020	NAME: INSTALLATION DRAWING DIESEL FIRE PUMP DRIVER MODEL AF12-159B	PROJECTION:
CHK BY:	DATE:		PROJECT:
APPROVED:	DATE:	PART NO.: AF12-159B-00	SCALE: NONE / PAGE 1 / OF 1
		MATERIAL:	

REV

UNITS IN[MM]